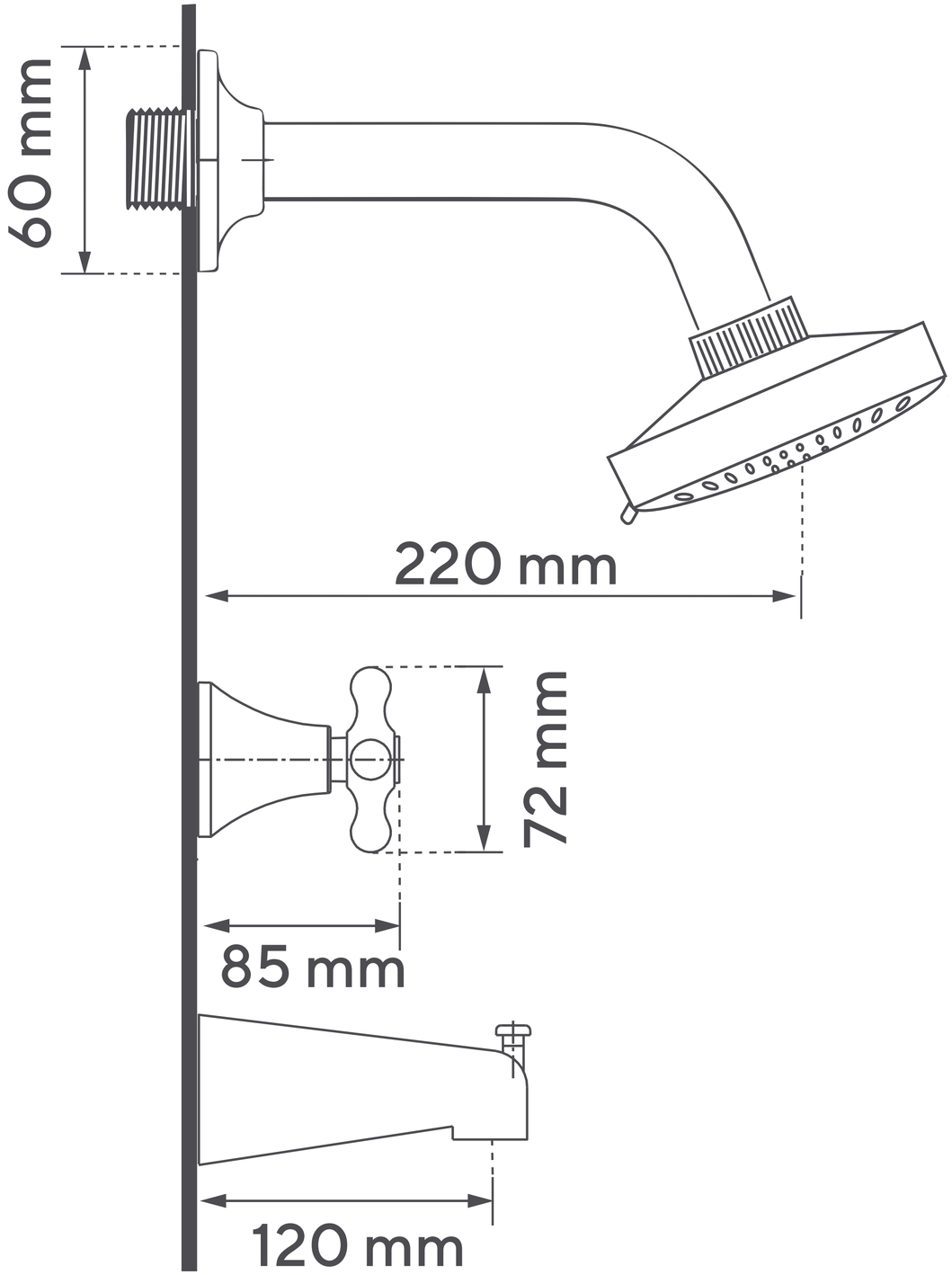
60 mm
220 mm
72 mm
85 mm
120 mm

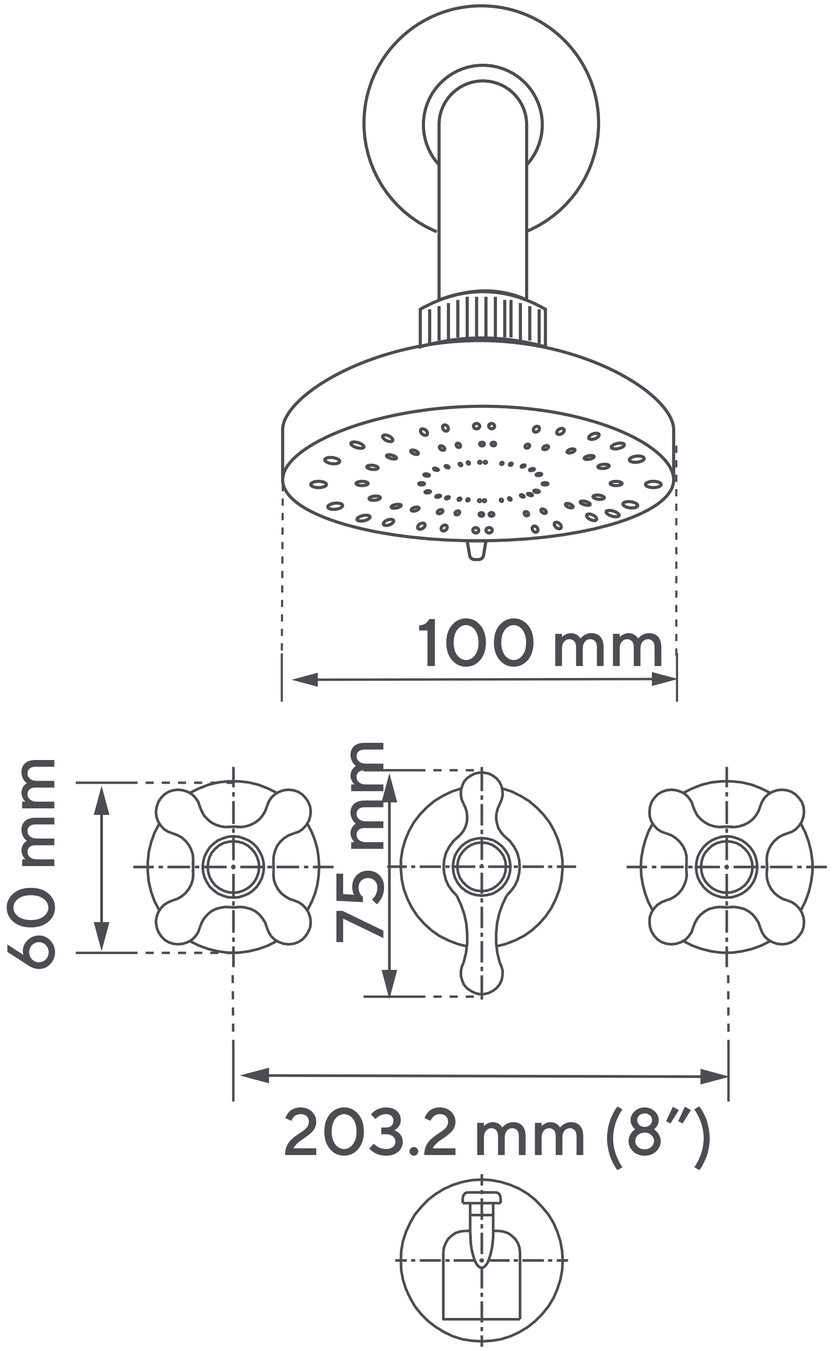
100 mm
60 mm
75 mm
203.2 mm (8″)