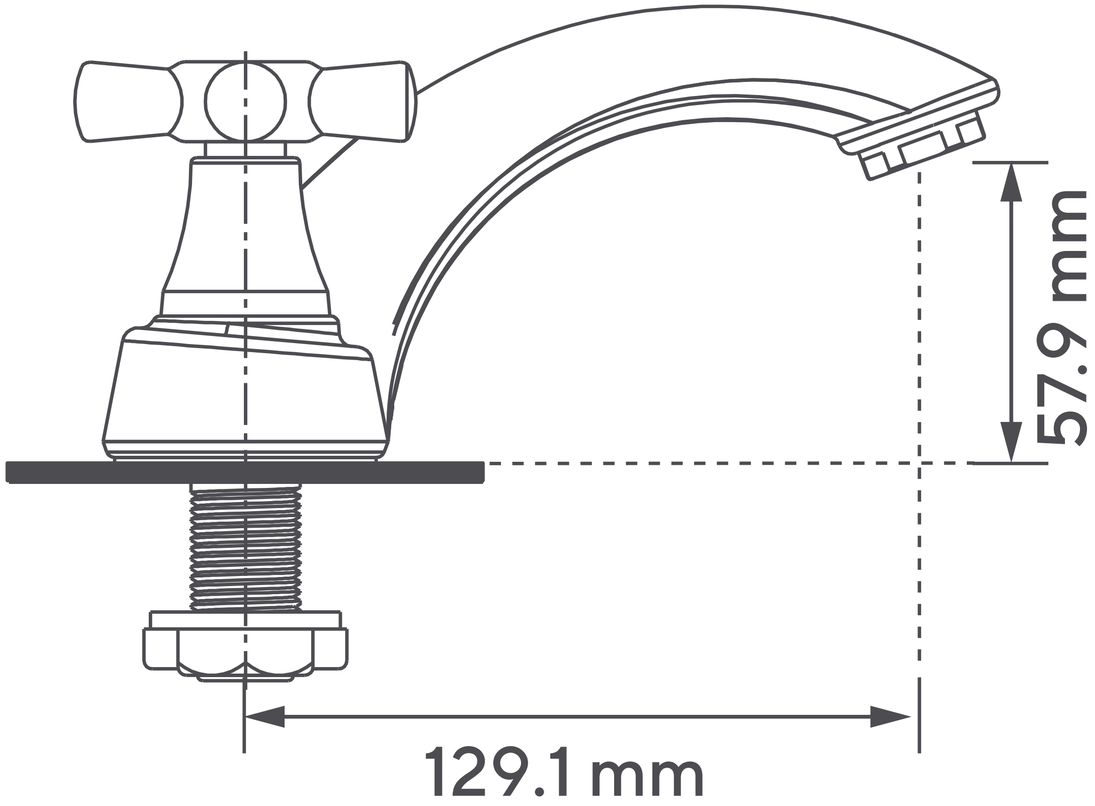
57.9 mm
129.1 mm

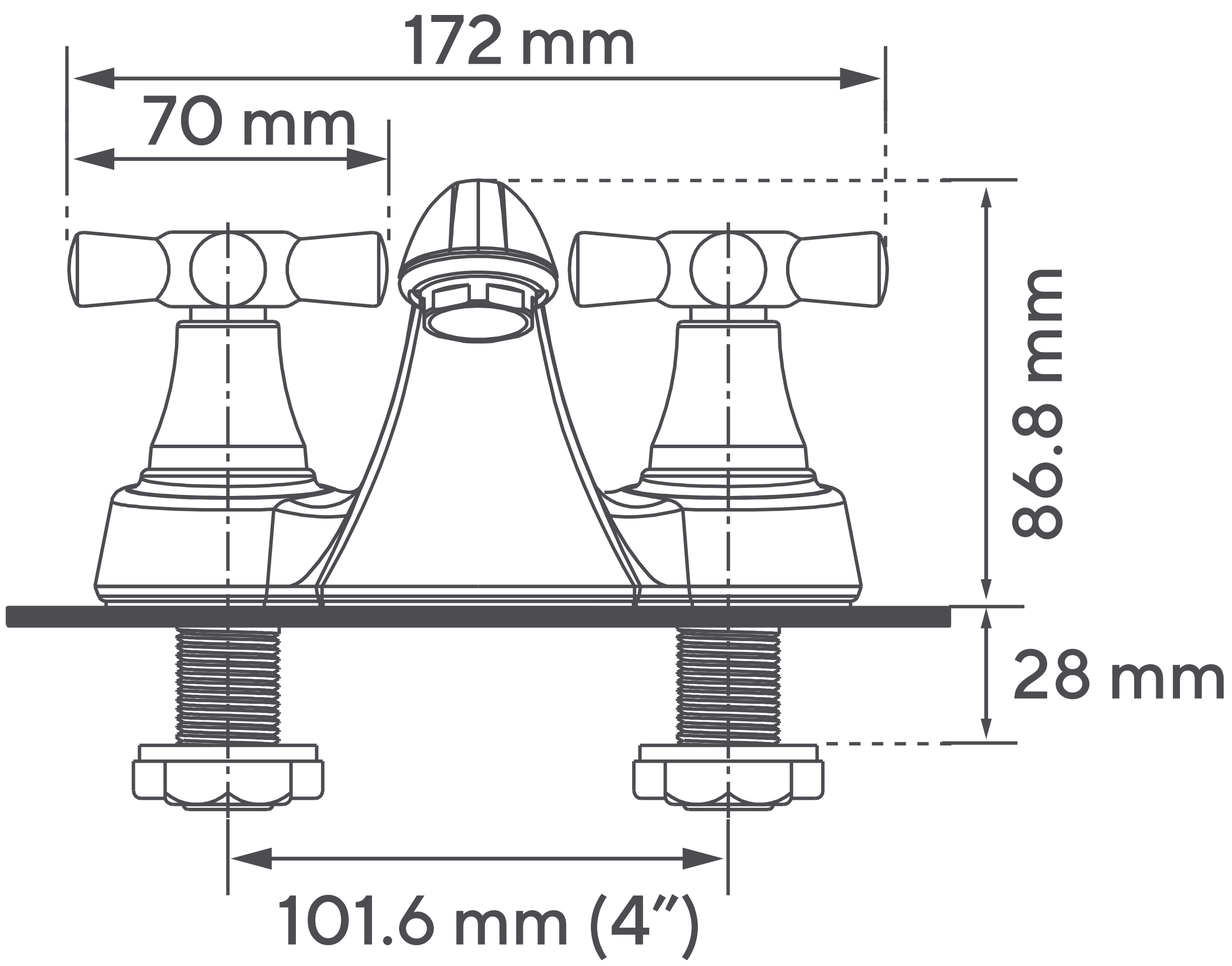
172 mm
70 mm
86.8 mm
28 mm
101.6 mm (4”)