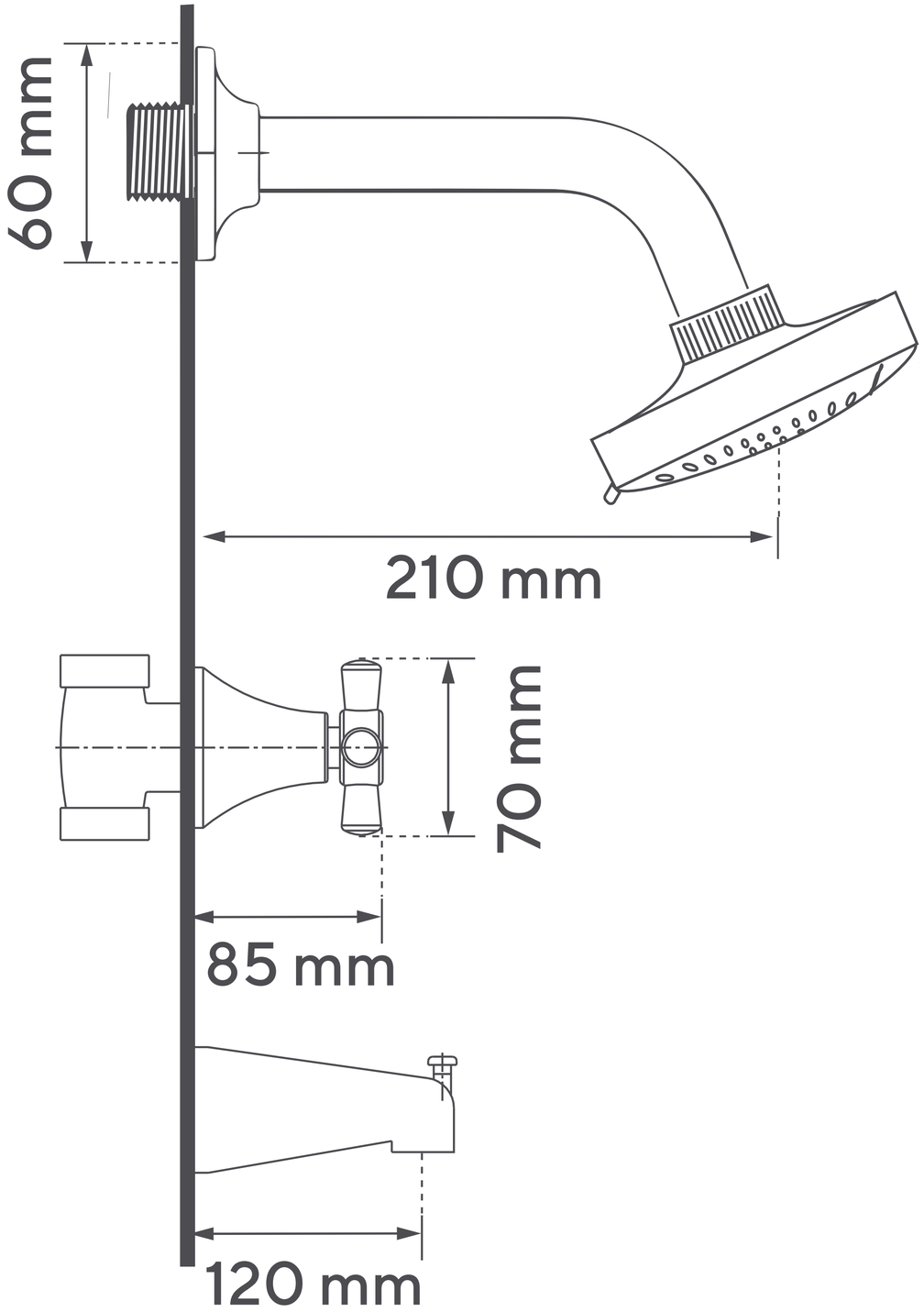
60 mm
210 mm
70 mm
85 mm
120 mm

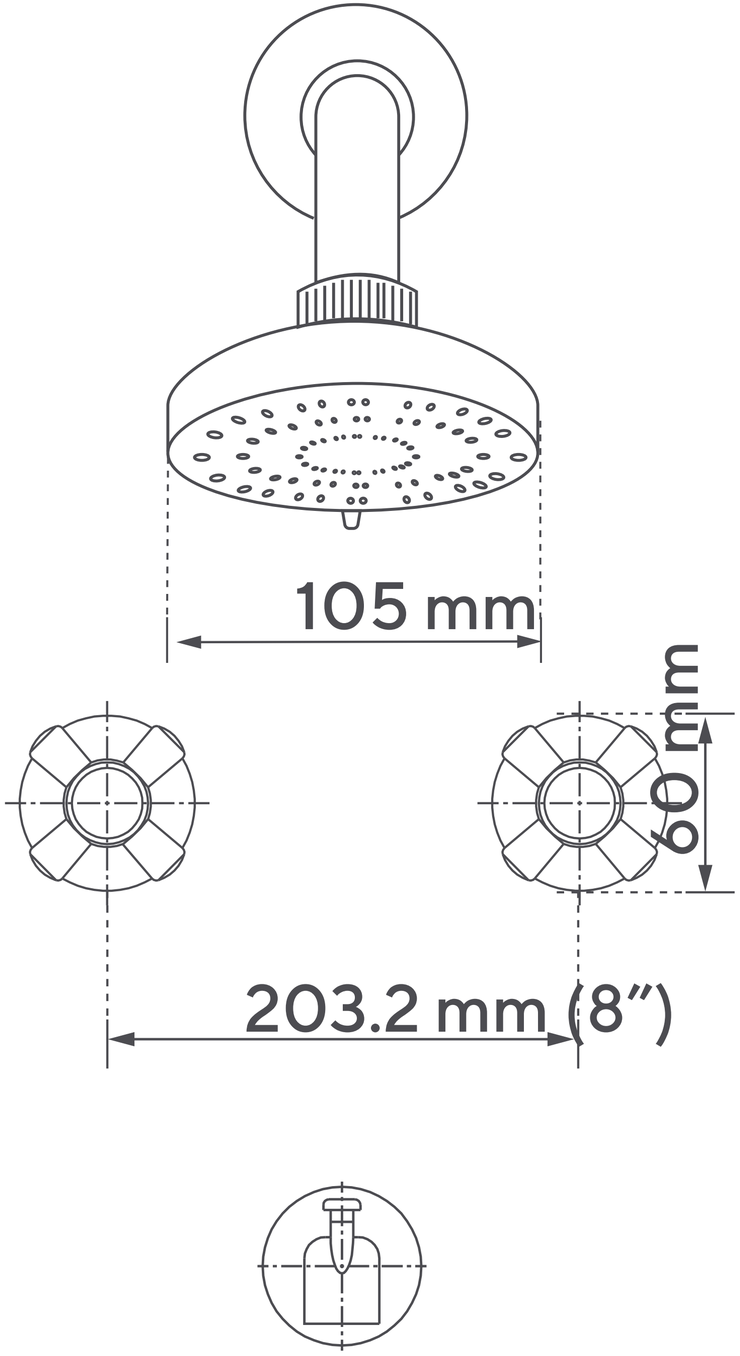
105 mm
60 mm
203.2 mm (8")