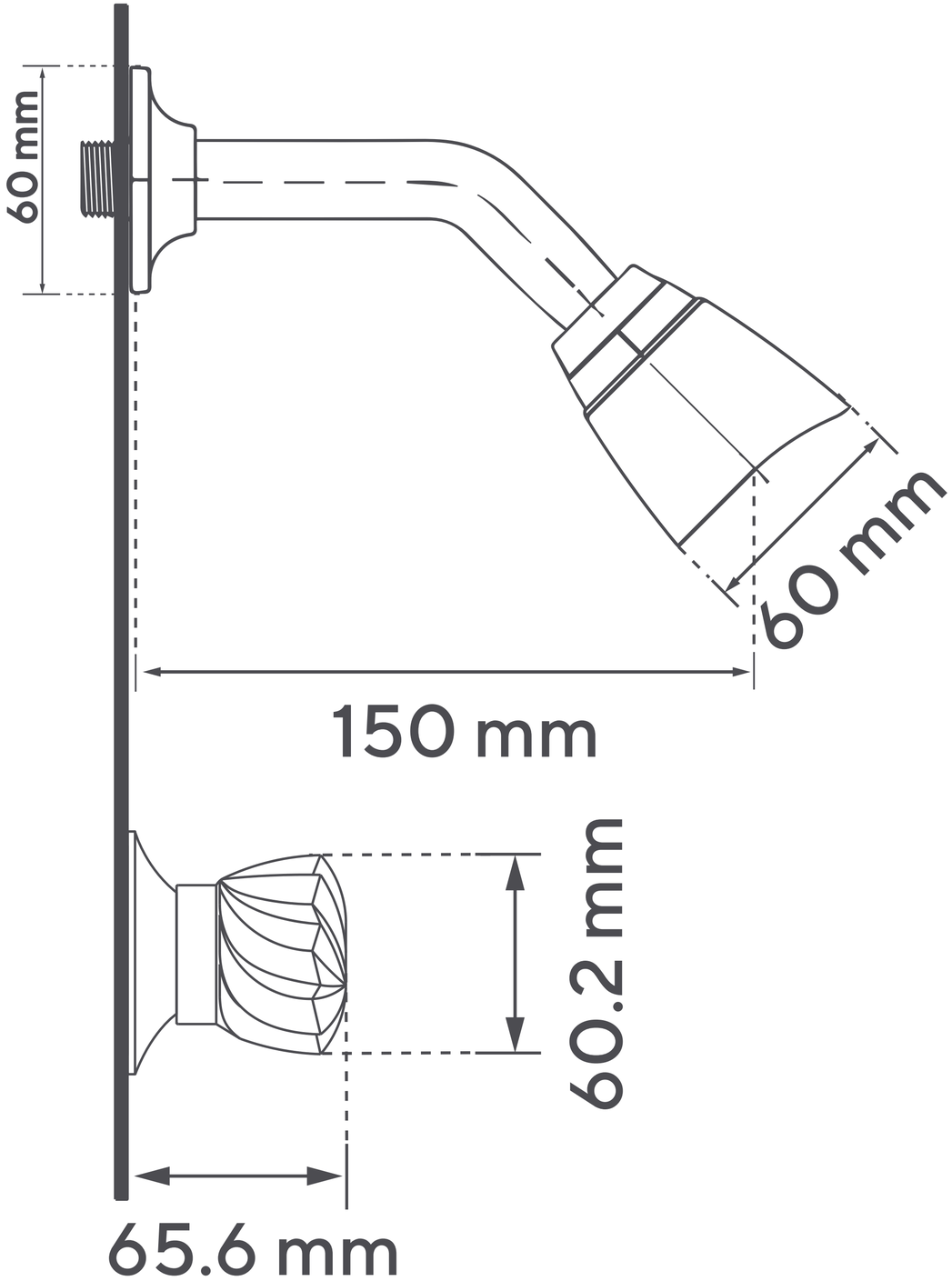
60 mm
60 mm
150 mm
60.2 mm
65.6 mm

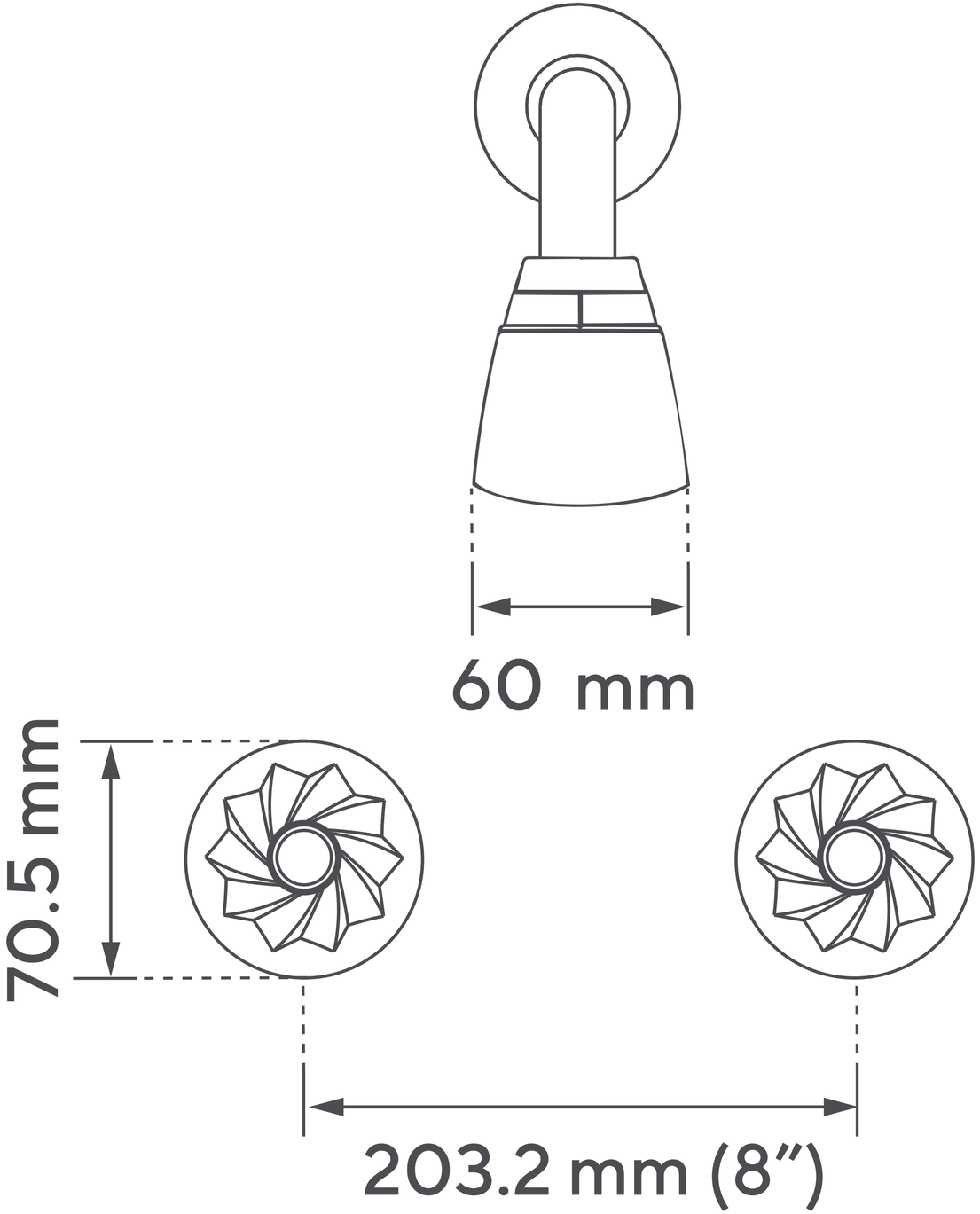
60 mm
70.5 mm
203.2 mm (8″)