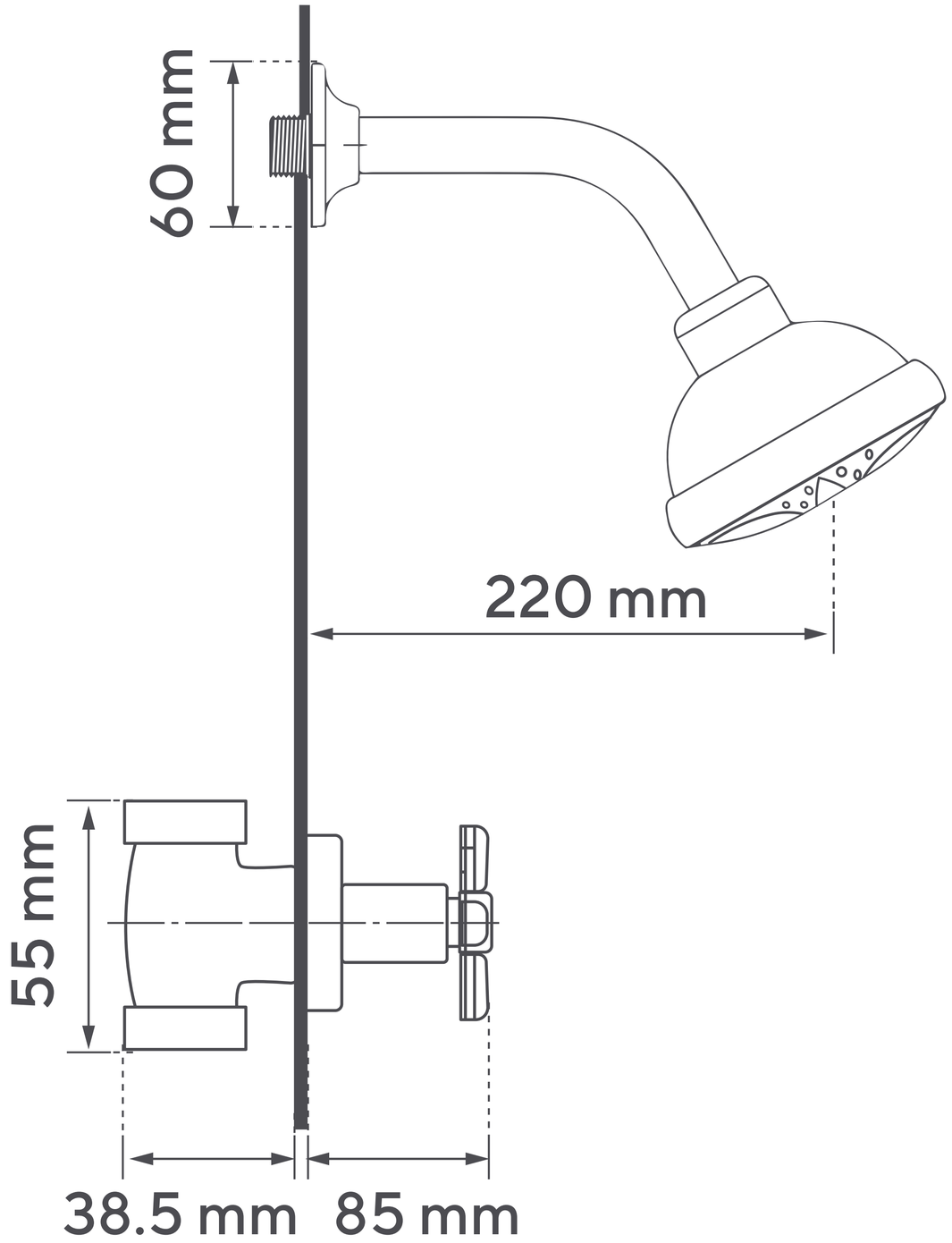
60 mm
220 mm
55 mm
38.5 mm
85 mm

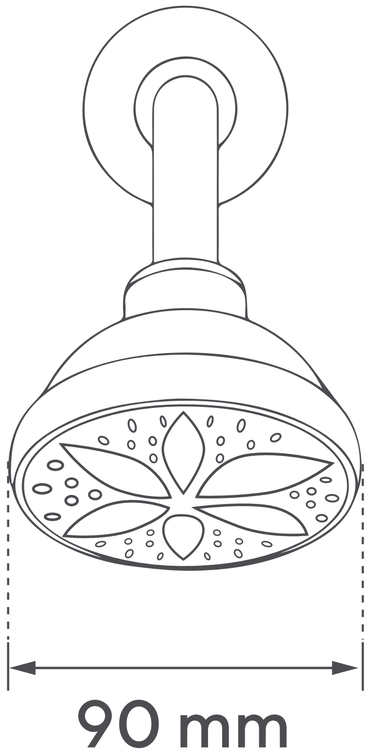
90 mm

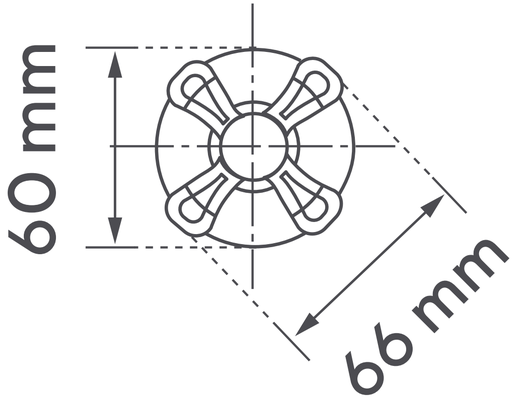
60 mm
66 mm