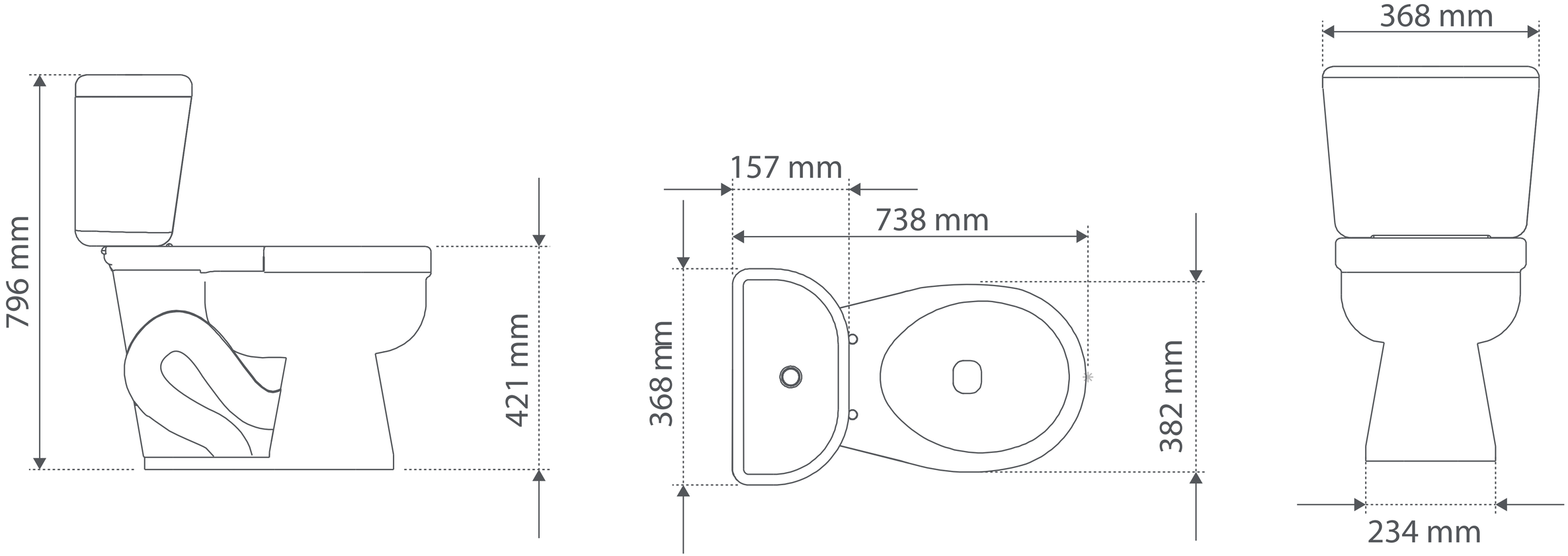
796 mm
421 mm
157 mm
738 mm
368 mm
382 mm
368 mm
234 mm