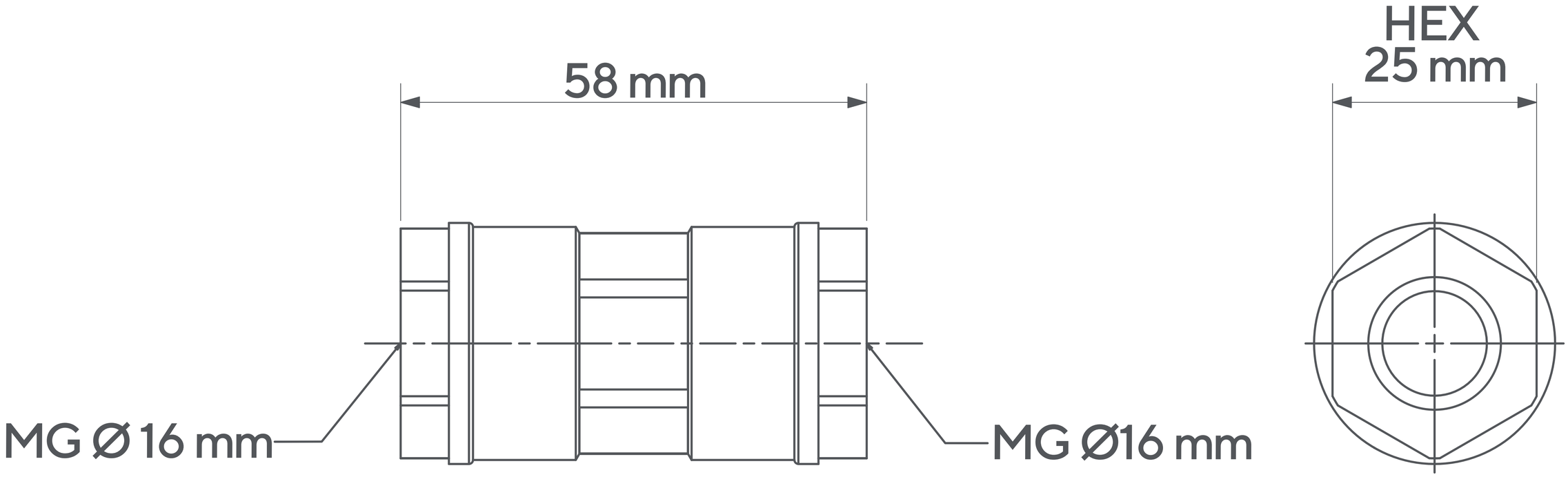
58 mm
HEX
25 mm
MG Ø 16 mm
MG Ø16 mm